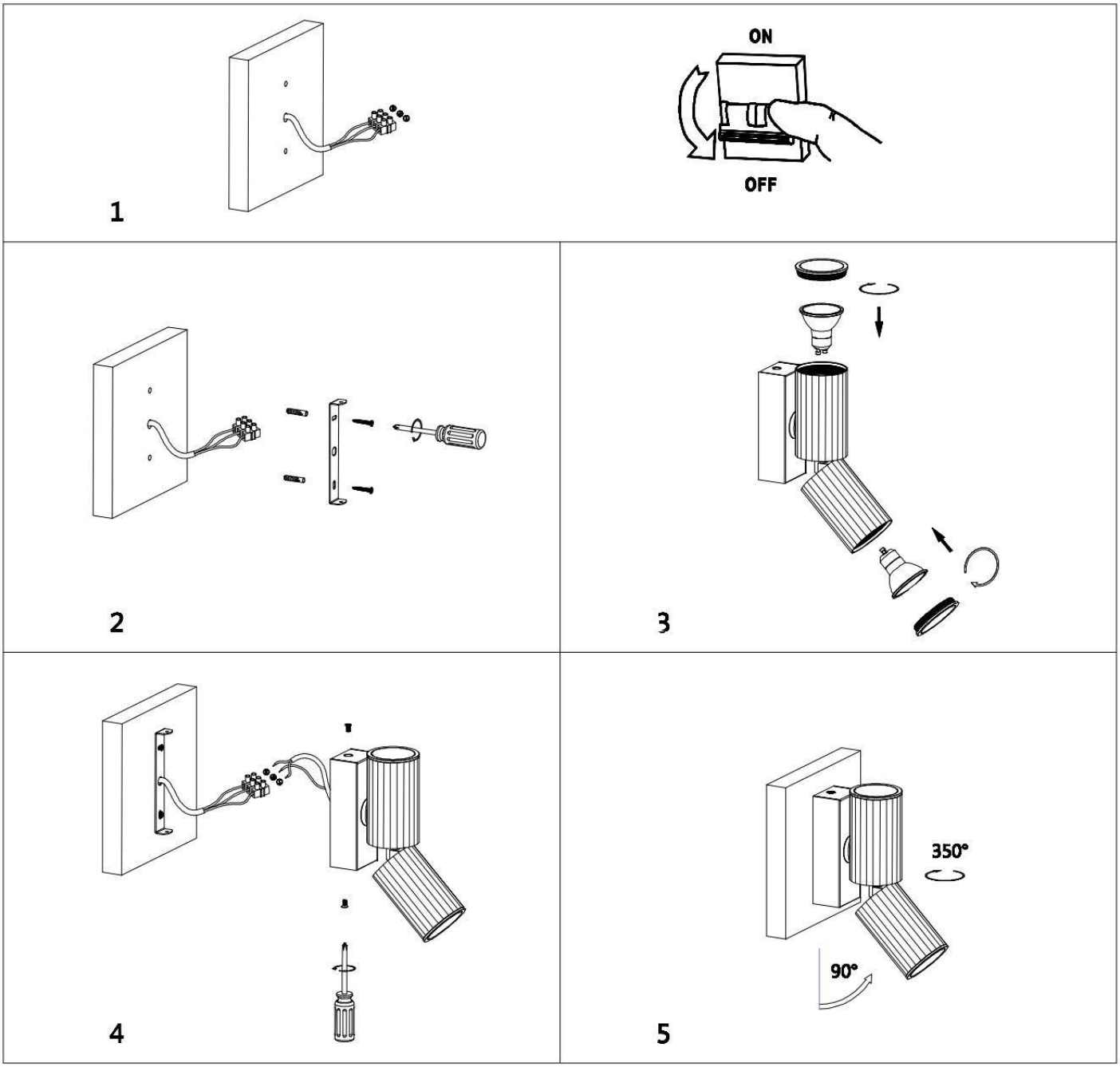Code article 86.RL02.1321.02