INDOOR / PROJECTEURS SUR RAIL / MAGNETIC TRACK / TRACK 2 SURFACE OR SUSPENDED INTALLATION

Code article 86.TL01.2200.02

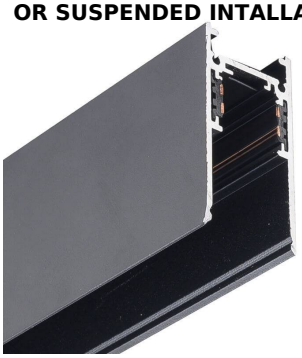

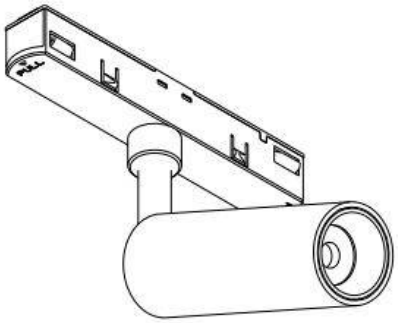

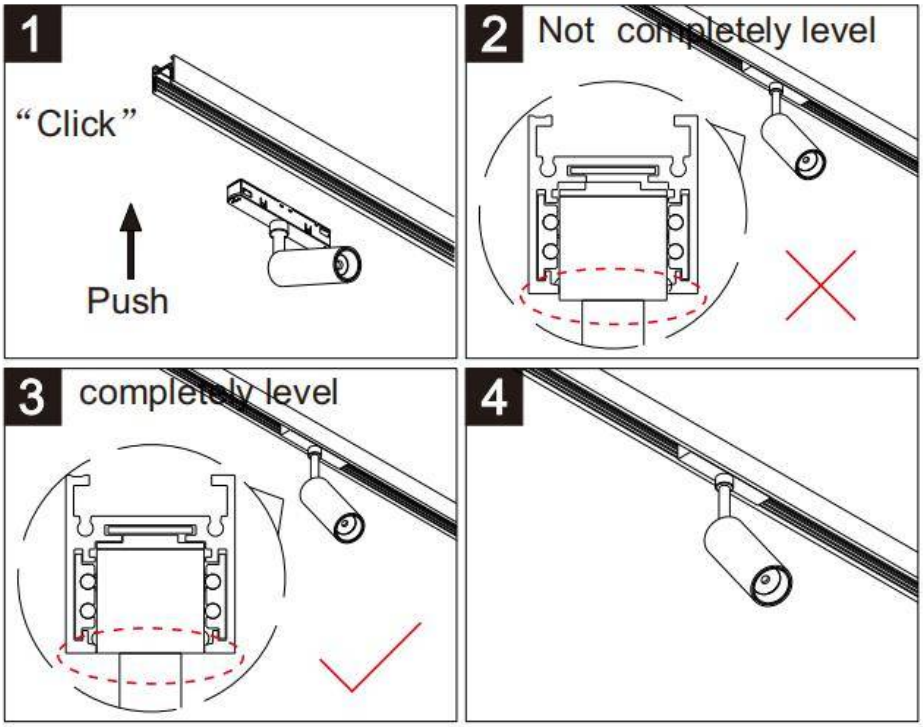

Note: The positive and negative (+, -) signal terminal of 0-10V dimming luminous must be installed corresponding to the input terminal.
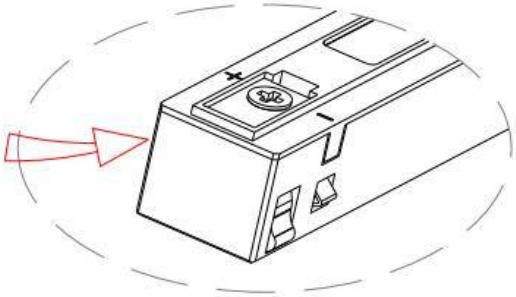
The positive and negative (+, -) signal terminal of DALI dimming luminous, the signal termial does not need to be installed corresponding to the input termial.