D-TUBE3

Lavov Downlights from the family D-TUBE3 ,power 54 W and CRI 80 with an optic 24 degrees made in Die Cast Aluminum finished in Black with a real lumen output of 4200lm and an efficiency of 77,77m/W. ON/OFF driver.

Item code	**86.D012.1321.02**
Product type	**Indoor**
Category	**Downlights**
Family	**D-TUBE**
Subfamily	**D-TUBE3**
Pictograms	

Scheme

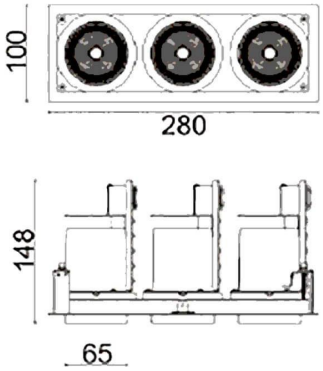

Product	
Real power (W)	**54**
Real luminous flux (Lm)	**4200**
Luminous efficiency (Lm/W)	**77.777777777777999**
Beam angle (º)	**24**
Life time (h)	**50000 h L80B10**
IP	**20**
Electrical class insulation	**Clas II**
Colour	**Black**
Control gear included	**Yes**
Control gear	**ON/OFF**
Flicker Free	**Yes**
Light source	**LED**
Type of LED	**COB**
Colour temperature (K)	**3000**
Colour consistency (SDCM)	**SDCM<3**
CRI	**80**